No. of Contacts	DIMENSIONS A	B	C
6	5.08	14.22	10.36
8	7.62	16.76	12.90
10	10.16	19.30	15.44
12	12.70	21.84	17.98
14	15.24	24.38	20.52
16	17.78	26.92	23.06
20	22.86	32.00	28.14
24	27.94	37.08	33.22
26	30.48	39.62	35.76
28	33.02	42.16	38.30
30	35.56	44.70	40.84
32	38.10	47.24	43.38
34	40.64	49.78	45.92
36	43.18	52.32	48.46
38	45.72	54.86	51.00
40	48.26	57.40	53.54
44	53.34	62.48	58.62
48	58.42	67.56	63.70
50	60.96	70.10	66.24
60	73.66	82.80	78.94
62	76.20	85.34	81.48
64	78.74	87.88	84.02
70	86.36	95.80	91.82
72	88.90	98.04	94.18
80	99.06	108.20	104.34
86	106.68	115.82	111.96
98	121.92	131.06	127.20
100	124.46	133.60	129.74
108	134.62	143.76	139.90
120	149.86	159.00	155.14

XSLOT-XXR-X-035-✳

Pin type

Bandolier (Brass)	B
Phosphor Bronze	P
◎Standard: P	

Number of Contacts

Right Angle

Null: P.B.T.
F: Nylon-6T

Contact Plating

Definition			Code
◎ Tin plated:			A
◎ Gold plated:			
flash	B	15μ"	F
10μ"	E	30μ"	J
◎Duplex plating:			
flash	K	20μ"	Q
10μ"	N	30μ"	U
15μ"	P		

◎Prefix "V" means lead free plating.

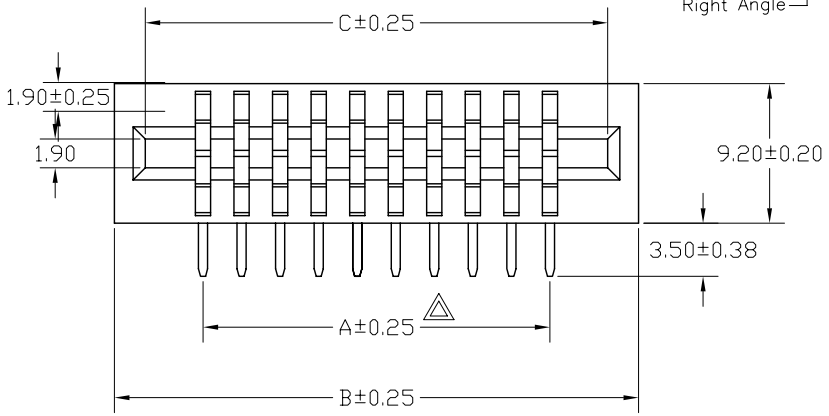

SPECIFICATIONS

Current Rating:	3 Amps
Insulator resistance:	5000 Megohms min.
Contact resistance:	20 m ohms max.
Dielectric withstanding:	AC 500 V
Operating Temperature:	−55°~+105°C
Contact Material:	Copper Alloy
Insulator Material:	Thermoplastic,UL 94V-0 or High Temperature (See P/N Option)

Finish: Selective Gold on contact area,
100 u" Min Tin-Lead Plated On Solder tail Area
both over 50 u" Min Nickel Under Plated

◎Standard: Duplex plating

◎Note:

Duplex plating: Gold plated on contact area,
Tin on solder area

Harmful material should be compliant to doc. "EI-0005" standards.

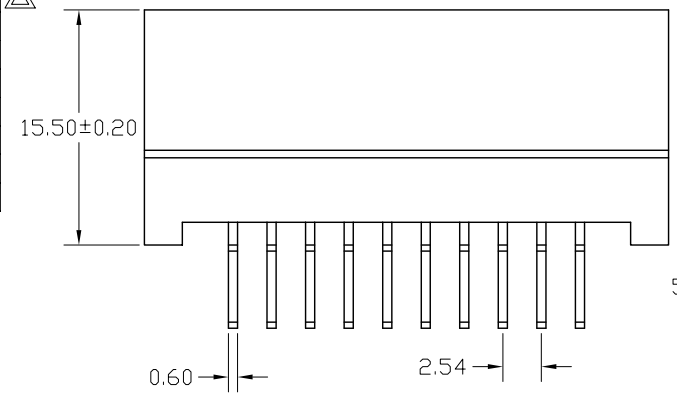

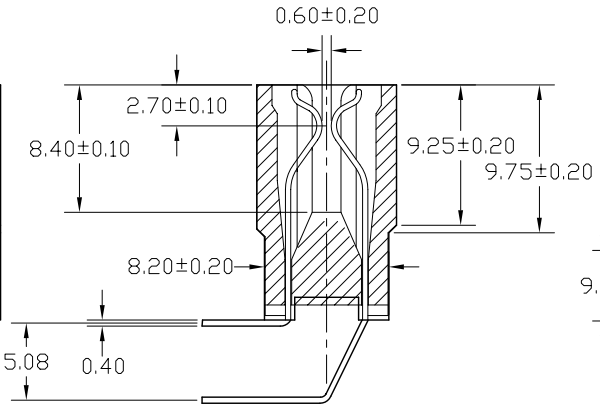

Recommended PCB Layout
(PCB TOLERANCE ±0.05)

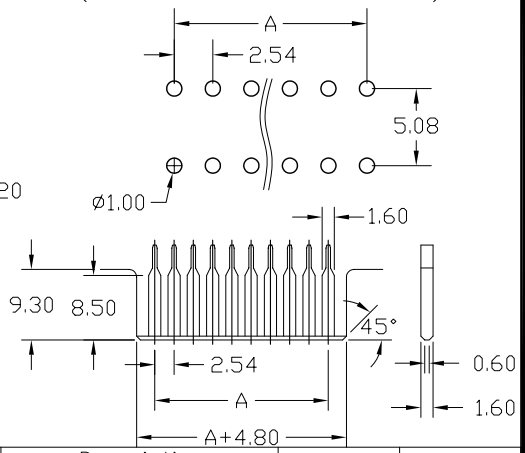

Rev.	ECN Number	Description	Drawn	Date
7	ECR-560072	圖面修改標示尺寸	陳賜農	06/15 05'
8	ECR-580100	圖面修改標示尺寸	陳美竹	08/29 05'
9	EC3-620134	新增高溫料號-F Nylon-6T	彭春霞/詹益東	03/07 06'

Plastron Precision Co., Ltd.
幃翔精密股份有限公司

GENERAL TOLERANCE	
XX. ± 0.50	XXX. ±
X. ± 0.30	.XXX ±
.X ± 0.25	X.° ± 4°
.XX ± 0.20	.X° ± 4°

SCALE 1=1	ORIGINAL DRAWN 趙華光	DATE 10/17 03'	DWG. NO. F:\DWG\CDWG\SLOT\SLOTR0E.DWG
UNIT MM	CHECK Fred Zhen	DATE 03/07 06'	PARTS NO. XSLOT-XXR-X-035-✳
SIZE A4/2	APPROVE Wolfe Liu	DATE 03/07 06'	

TITLE 2.54X2.54mm CARD EDGE SOCKET (成品規格圖)

REV. 9

SHEET 1/1